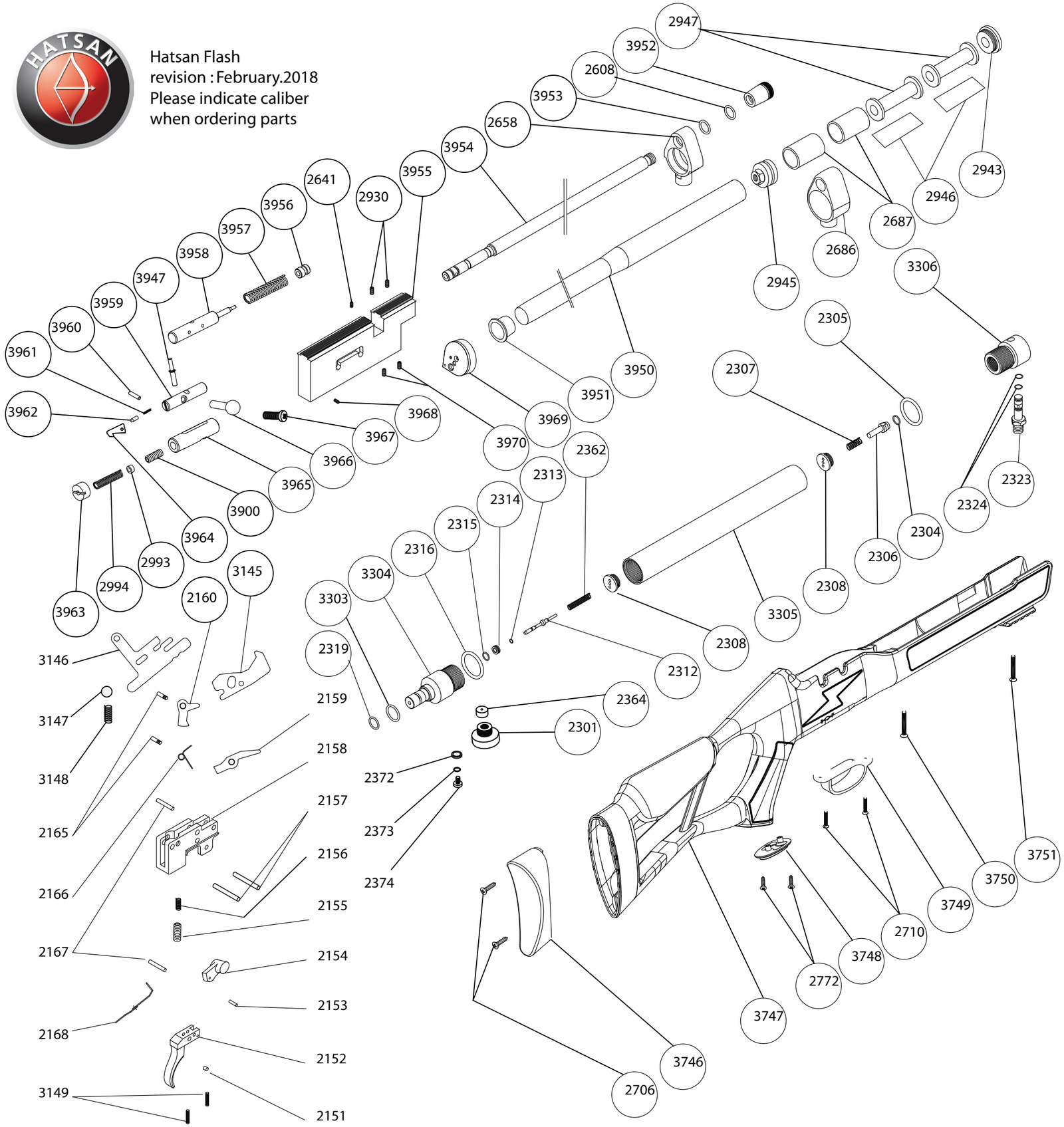Hatsan Flash
revision : February.2018
Please indicate caliber
when ordering parts